94244 | Paulmann notice

Paulmann

IP44

Info

www.paulmann.com

Paulmann Licht GmbH
Quezinger Feld 2
31832 Springe
Germany

www.paulmann.com

Art.-Nr.: **94244/45**
PJY 10/18

1x

incl

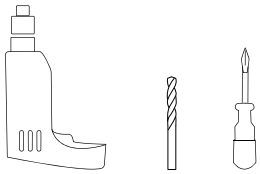

A

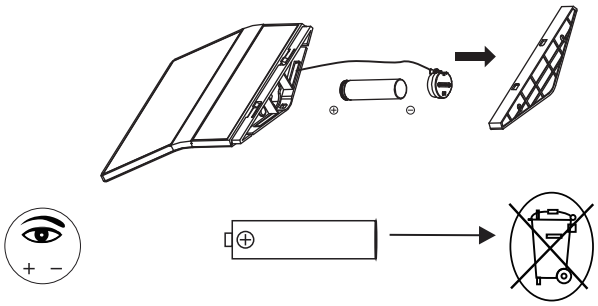

only use rechargeable 1xLi-ion Batteries (DC3.7V, 1800mAh)

B

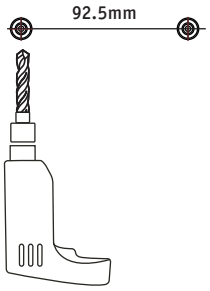

C

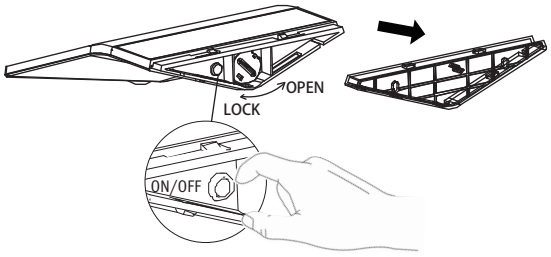
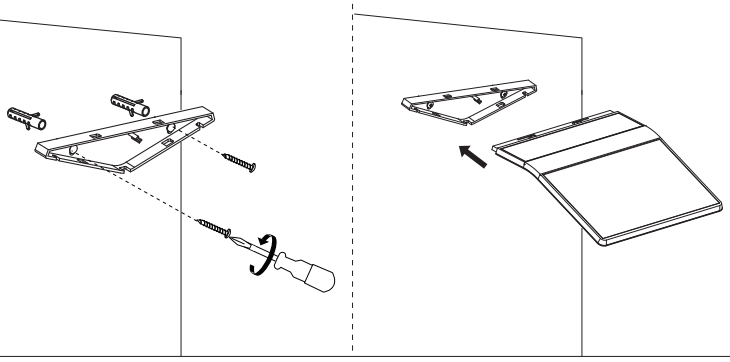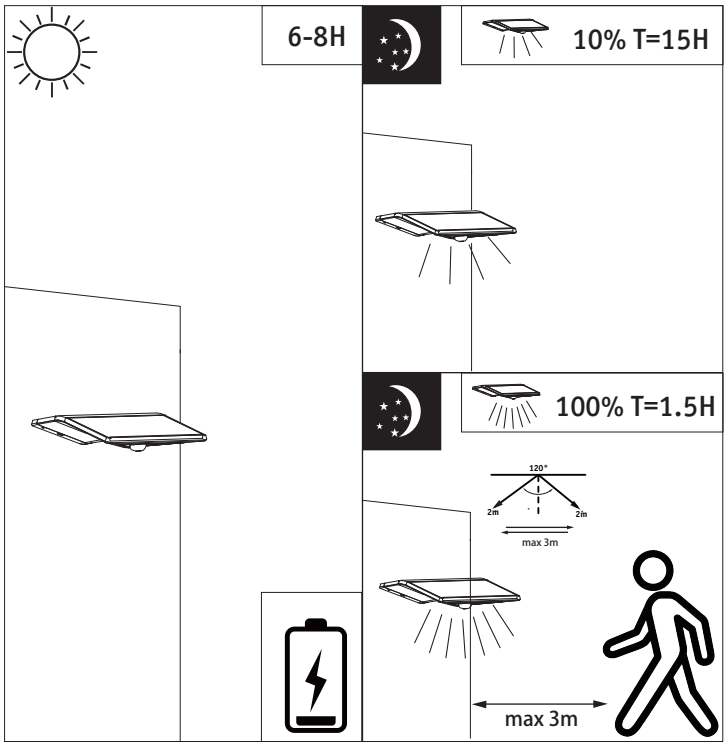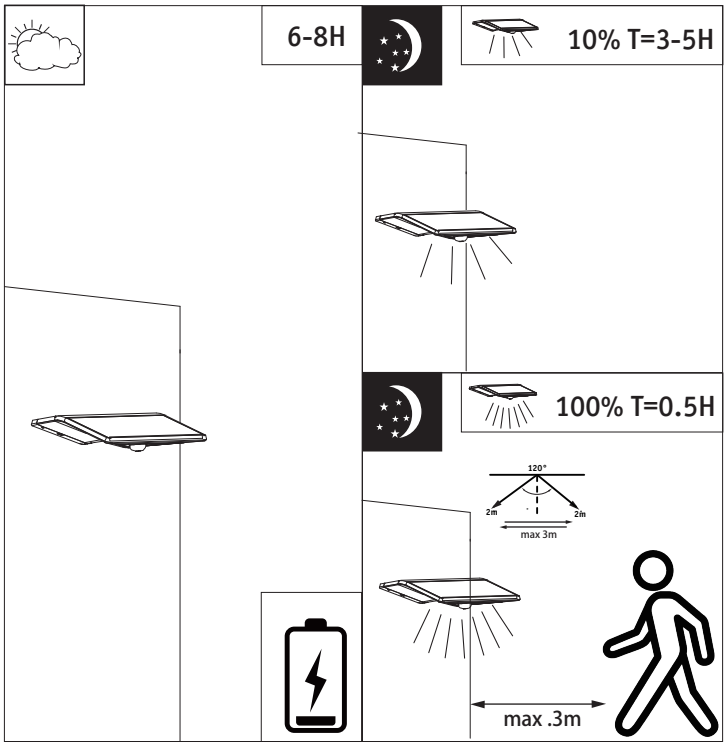
D